SHIMANO®

AERNOS

ARNS-6000

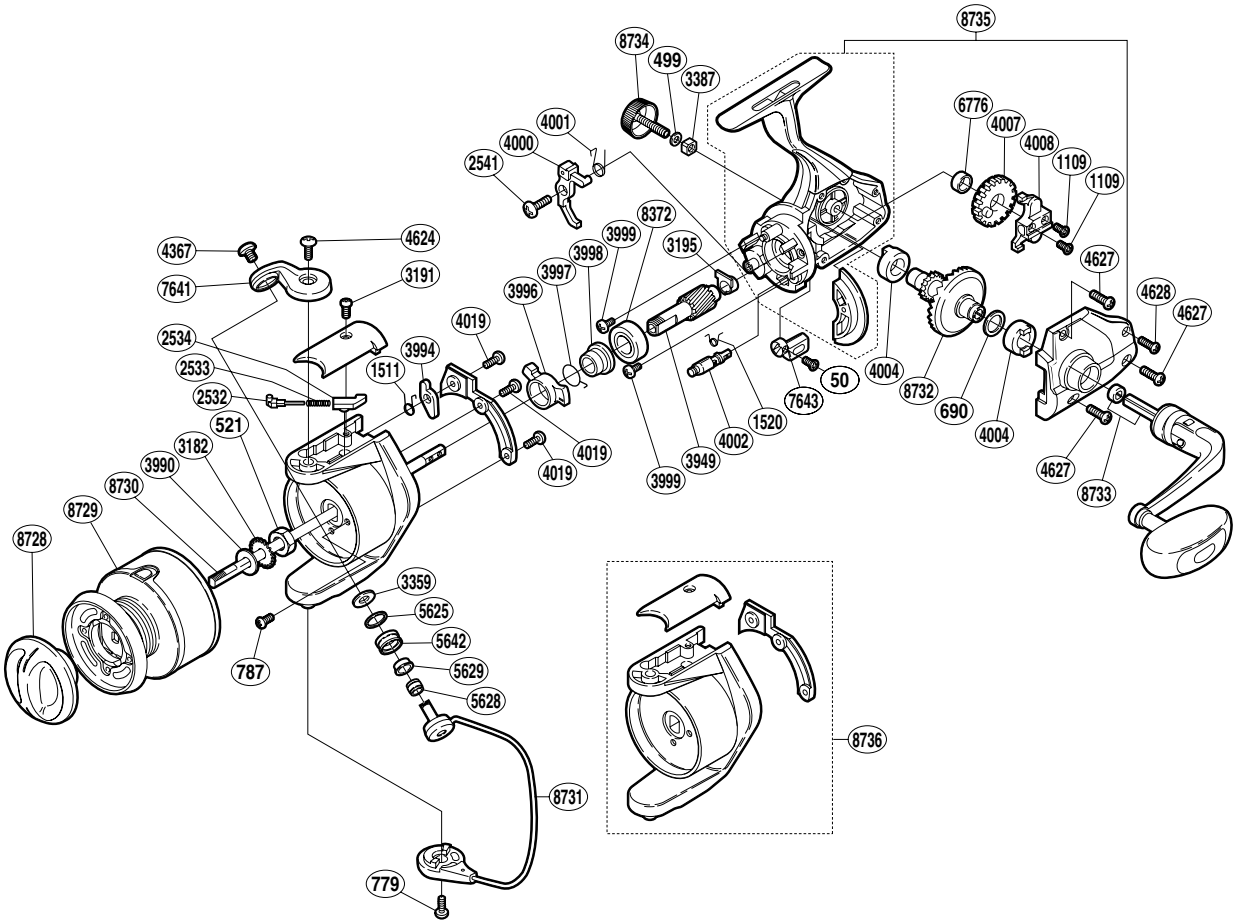

Part No.	Description	Part No.	Description	Part No.	Description
RD 0050	Anti-Reverse Lever Screw	RD 3949	Pinion Gear	RD 5625	Line Roller Spacer
RD 0499	Handle Lock Washer	RD 3990	Spool Washer	RD 5628	Line Roller Collar
RD 0521	Rotor Nut	RD 3994	Bail Trip Lever	RD 5629	Line Roller Bushing
RD 0690	Drive Gear Washer	RD 3996	Anti-Reverse Lock Out	RD 5642	Line Roller
RD 0779	Bail Hold Support Screw	RD 3997	Anti-Reverse Lock Out Spring	RD 6776	Oscillating Gear Bushing
RD 0787	Nut Lock Screw	RD 3998	Lock Out Spring Holder	RD 7641	Bail Arm
RD 1109	Slider Retainer Screw	RD 3999	Bearing Retainer Screw	RD 7643	Anti-Reverse Lever
RD 1511	Lever Spring	RD 4000	Anti-Reverse Pawl	RD 8372	Ball Bearing
RD 1520	Anti-Reverse Cam Spring	RD 4001	Anti-Reverse Pawl Spring	RD 8728	Drag Knob
RD 2532	Bail Spring Guide (A)	RD 4002	Anti-Reverse Cam	RD 8729	Spool Assembly
RD 2533	Bail Spring	RD 4004	Drive Gear Bushing	RD 8730	Main Shaft
RD 2534	Bail Spring Guide (B)	RD 4007	Oscillating Gear	RD 8731	Bail Assembly
RD 2541	Anti-Reverse Pawl Screw	RD 4008	Oscillating Slider	RD 8732	Drive Gear
RD 3182	Spool Support	RD 4019	Counterbalance Cover Screw	RD 8733	Handle Assembly
RD 3191	Bail Spring Cover Screw	RD 4367	Line Roller Screw	RD 8734	Handle Screw Cap
RD 3195	Bushing	RD 4624	Bail Arm Screw	RD 8735	Body Assembly
RD 3359	Line Roller Washer	RD 4627	Side Cover Screw (large)	RD 8736	Rotor Assembly
RD 3387	Handle Screw Lock	RD 4628	Side Cover Screw (small)		

(150404)